MATERIAL DATA SHEET

KR 003

EPDM solid: D2000 M1AA 707
EPDM SPONGE: SAE J18B
Application: Top Seal

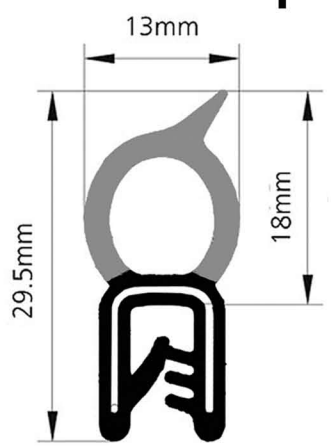

TEST	SPEC	FREQUENCY
Tensile Strength	>10	Monthly
Elongation at Break	>250	Monthly
Compression Set	<50	Monthly
Hardness	65-75	Monthly
Specific Gravity	1.19-1.29	Monthly
Tear Strength	750	Monthly
Aged Hardness	+/- 10	Every 3 Months
Aged Tensile Strength	+/- 15%	Every 3 Months
Aged Elongation at Break	<-50%	Every 3 Months
Paint Staining	None	Yearly
Ozone	No Cracks	Yearly

DATA
KR 003
2017

T:01527 570570 F: 01527 575200
W: www.kingfisherrubber.co.uk
E: sales@kingfisherrubber.co.uk